INSTALLATION GUIDE

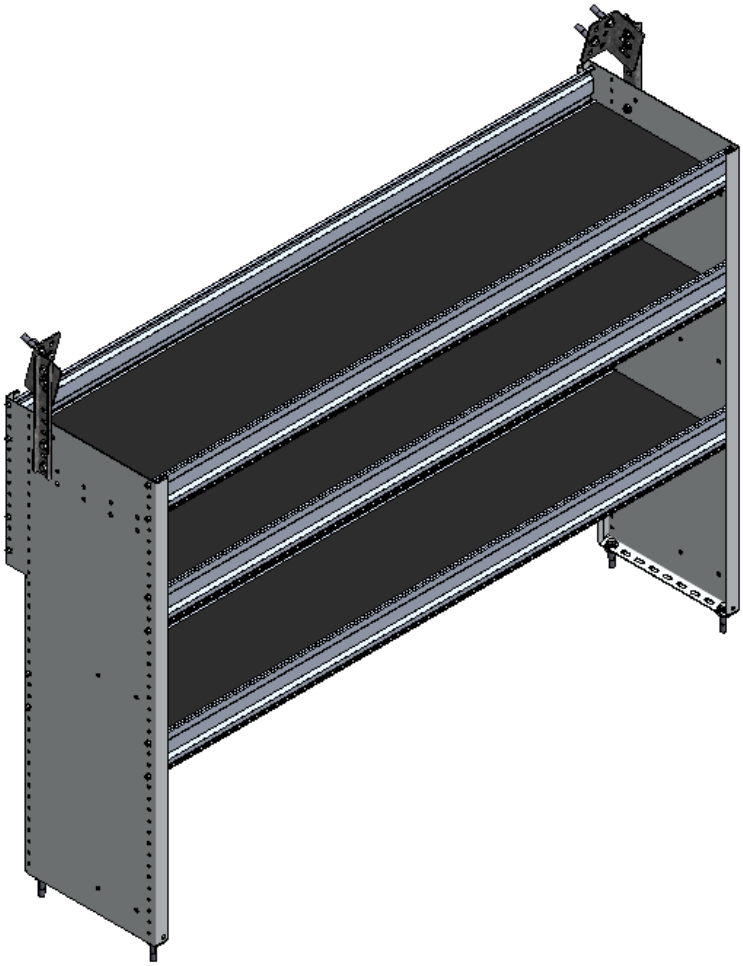

T4-RA60-3 Shelving (ALUMINUM)

Transit Connect LWB

RANGER DESIGN

QUICK START GUIDE

Phase 1 - Assembly

- ❑ 1.1 Setup..... 3 - 4
- ❑ 1.2 Shelf Assembly..... 5 - 6

Phase 2 - Installation

- ❑ 2.1 Attach Wall Brackets To The End Panels..... 7
- ❑ 2.2 Mark Holes For Plus Nuts..... 8
- ❑ 2.3 Attach Plus Nut..... 9 - 10
- ❑ 2.4 Attach Shelf Unit To the Floor..... 11 - 12
- ❑ 2.5 Attach Wall Brackets..... 13

REQUIRED ITEMS

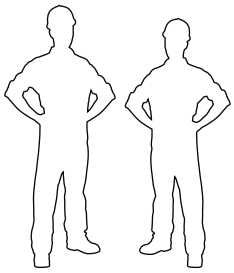

2 PERSONS

- ❑ Cordless Impact
- ❑ Cordless Drill
- ❑ Tape Measure
- ❑ Marker
- ❑ 1/2" Socket
- ❑ 1/2" Drill Bit w/ Drill Collar (Set at 1/2")
- ❑ 3/8" Driver Bit
- ❑ Knife
- ❑ Plusnut Tool / Plusnut Gun (5/16")

PHASE 1 – ASSEMBLY

1.1 SETUP

1.1.1 Unpack components; compare with the bill of materials.

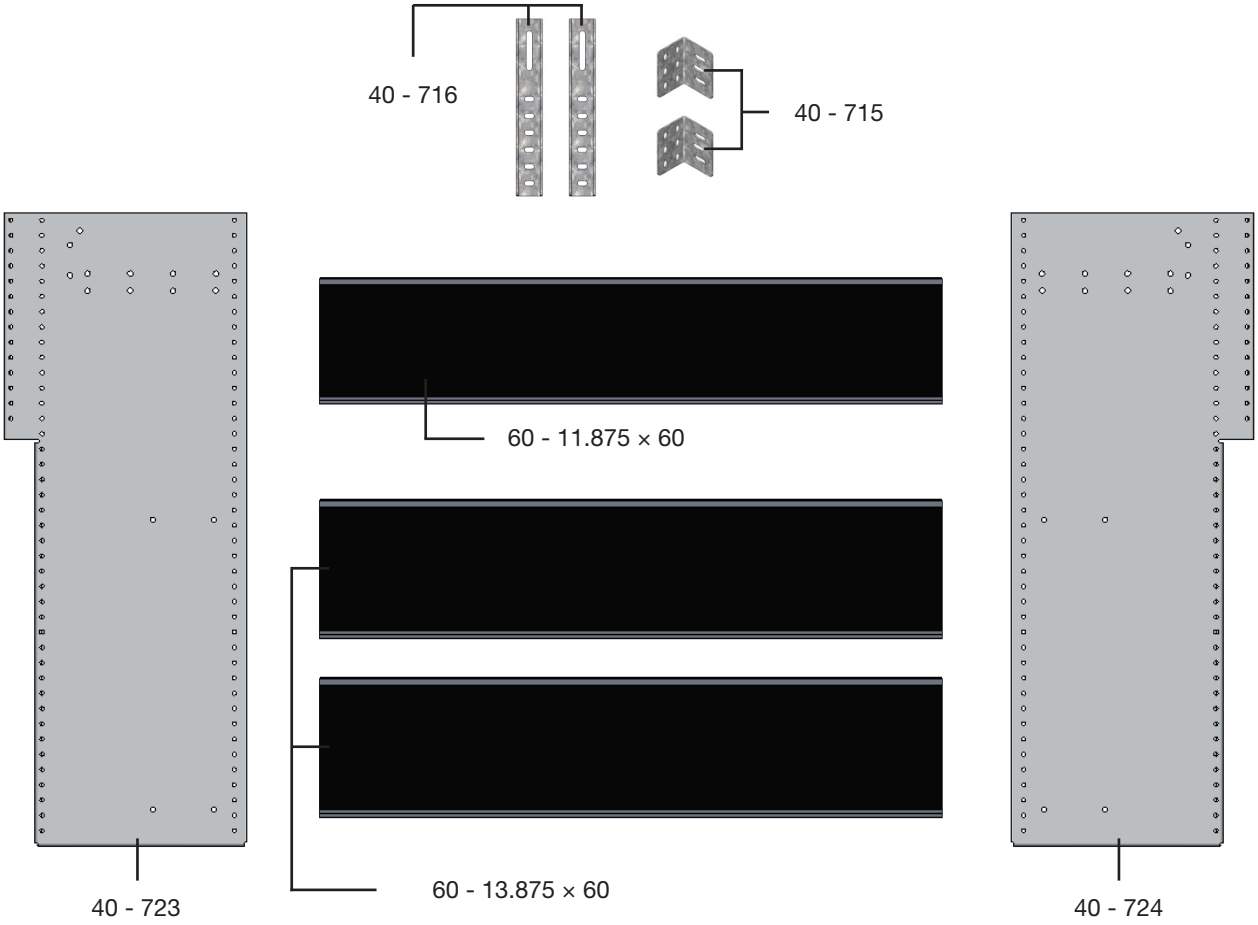

1.1.2 Verify all parts are present.

BILL OF MATERIALS

Item No.	Description	Qty.
40 - 715	Bracket head	2
40 - 716	Bracket arm	2
40 - 723	End Panel (Left)	1
40 - 724	End Panel (Right)	1
60 - 11.875 × 60	Shelf Tray, Black Plywood, Usable 12" × 60"	1
60 - 13.875 × 60	Shelf Tray, Black Plywood, Usable 14" × 60"	2
94 - 4027	Assembly Fastener Kit	1
96 - 4027	Install Fastener Kit	1

1.1.3 Fastener kits.

94 - 4027 Fastener Kit → Fastener Assembly

8×		**# 90-204**	Hex Bolt 5/16"-18 × 3/4" GR-5 ZINC
24×		**# 92-102**	Screw HWH #14 × 1" ZINC
8×		**# 94-116**	Serrated Nut 5/16"-18 ZINC
8×		**# 98-116**	Flat Washer 5/16" - 18 × 1" ZINC

8×

#90-204 Hex Bolt 5/16" × 3/4"
#98-116 Flat Washer
#94-116 Serrated Nut

24×

#92-102 Screw #14 × 1"

96 - 4027 Fastener Kit → Fastener Assembly

4×		**# 90-212**	Hex Bolt 5/16"-18 × 1-1/4" GR-5 ZINC
4×		**# 90-011**	Hex Bolt 5/16"-18 × 1-3/4" GR-5 ZINC
8×		**# 94-132**	Plusnut
8×		**# 98-116**	Flat Washer 5/16", O.D. 7/8" ZINC
8×		**# 98-122**	Lock Washer 5/16" ZINC
4×		**# 98-157**	Spacer 0.375" ID, × 1.0" OD × 0.25" LONG NYLON

4×

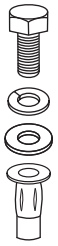

#90-212 Hex Bolt 5/16" × 1-1/4"
#98-122 Lock Washer
#98-116 Flat Washer
#94-132 5/16" Plusnut

4×

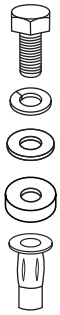

#90-011 Hex Bolt 5/16" × 1-3/4"
#98-122 Lock Washer
#98-116 Flat Washer
#98-157 Spacers
(QTY = Gap between floor and end panel)
#94-132 5/16" Plusnut

PHASE 1 – ASSEMBLY

1.2 SHELF ASSEMBLY

1.2.1 Attach both panels to the shelf trays.

NOTE: You can adjust the bottom shelf location to maximize or minimize your space over the wheel.

IMPORTANT: Always handle panels on a smooth, protected and clean surface to avoid unnecessary scratching.

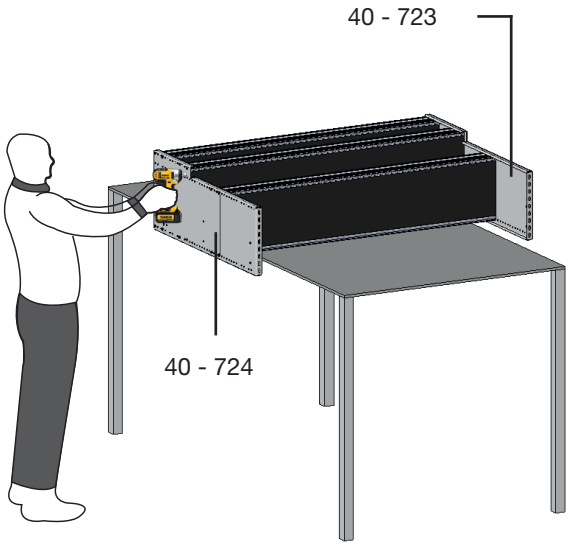

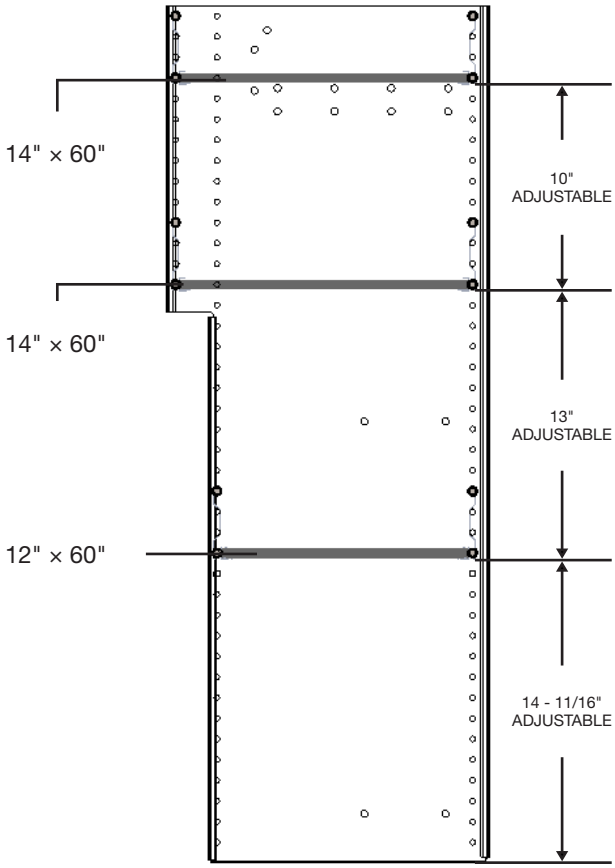

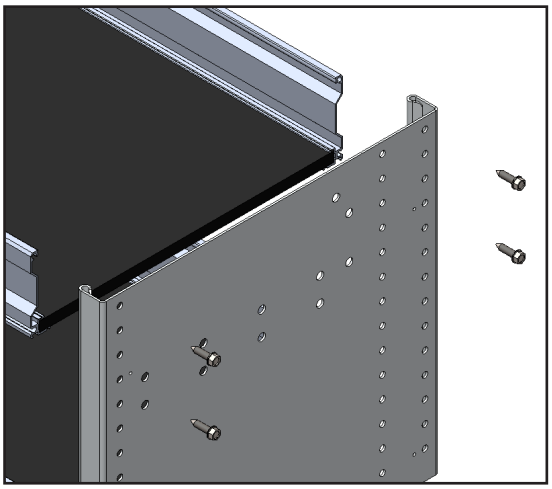

TOOLS

- ❑ Cordless Impact
- ❑ 3/8" Driver Bit

HARDWARE USED

24×

#92-102 Screw #14 × 1"

1.2.2 Attach the bracket head to the bracket arm.

NOTE: Hand-tighten the bolts for adjustment.

2×

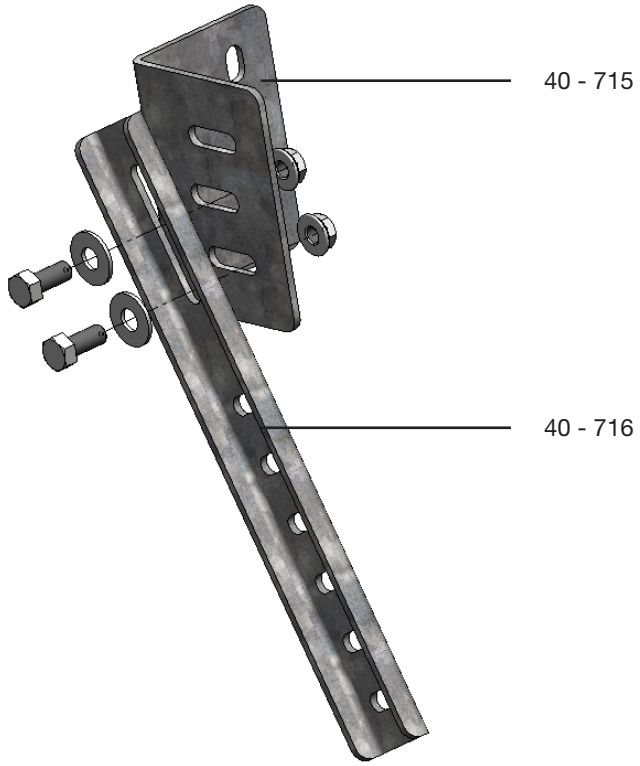

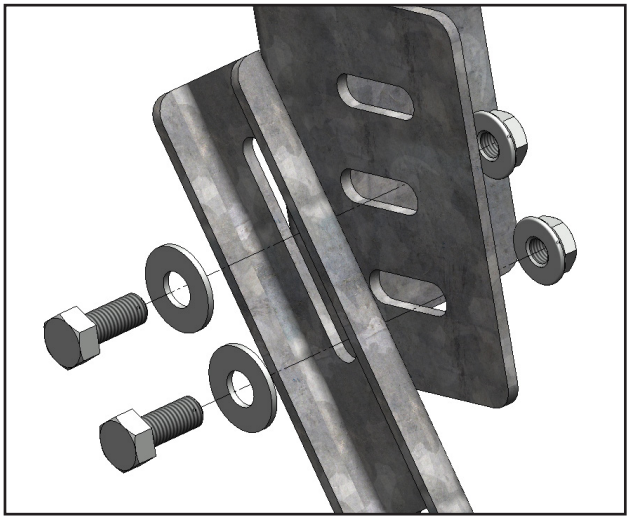

TOOLS

- ❑ Cordless Impact
- ❑ 1/2" Socket

HARDWARE USED

4× HAND-TIGHTEN THE BOLTS

#90-204 Hex Bolt	5/16" × 3/4"
#98-116 Flat Washer	
#94-116 Serrated Nut	

PHASE 2 – INSTALLATION

2.1 ATTACH WALL BRACKETS TO THE END PANELS

2.1.1 • Lift the assembled shelf to the vehicle, then put it in place.
• Attach the bracket arm to the panels aligning the brackets head to the horizontal rim of the vehicle.

NOTE: Handle with care.

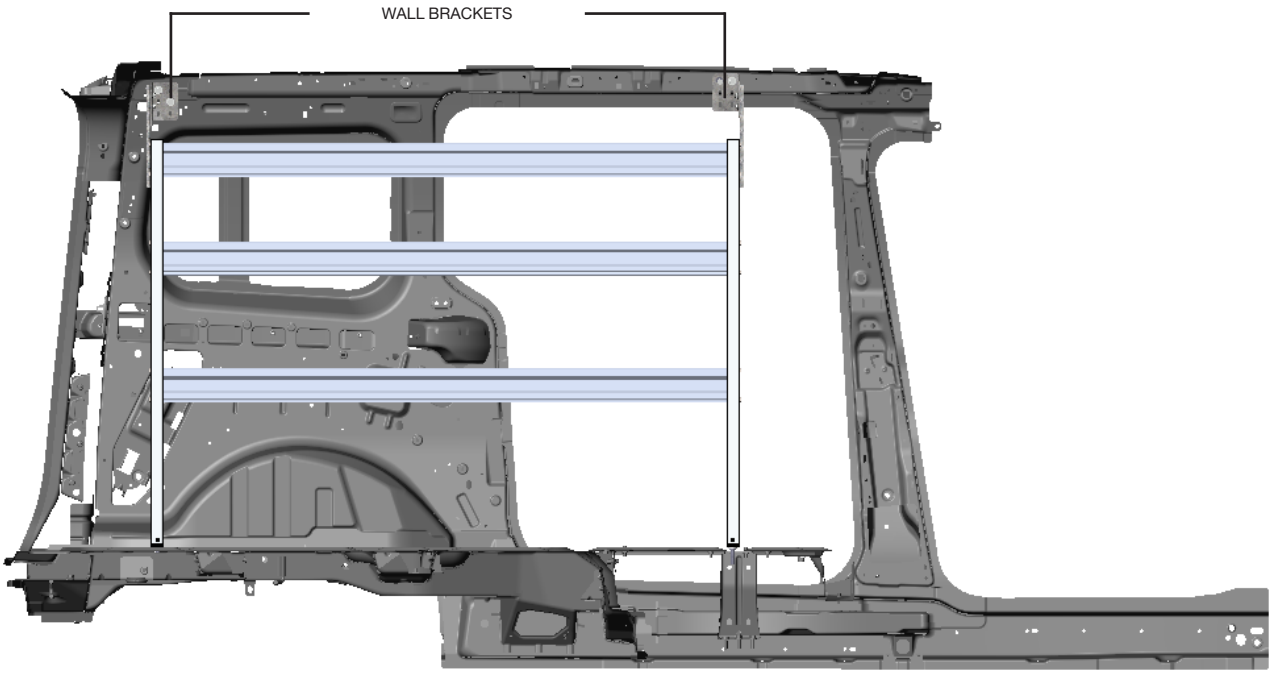

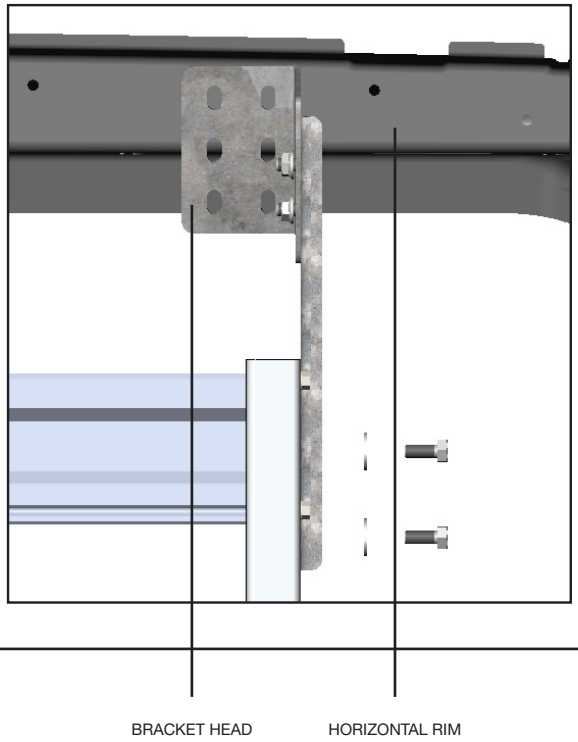

TOOLS

- ❑ Cordless Impact
- ❑ 1/2" Socket

HARDWARE USED

4× **HAND-TIGHTEN THE BOLTS**

#90-204 Hex Bolt	5/16" × 3/4"
#98-116 Flat Washer	
#94-116 Serrated Nut	

PHASE 2 – INSTALLATION

2.2 MARK HOLES FOR PLUS NUTS

2.2.1 After attaching the brackets mark the holes on the brackets and end panels to the vehicle.

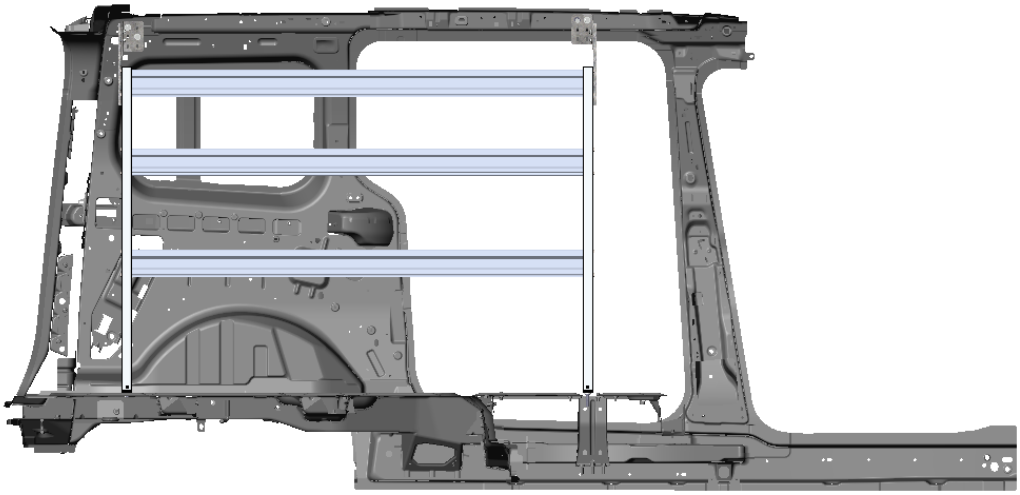

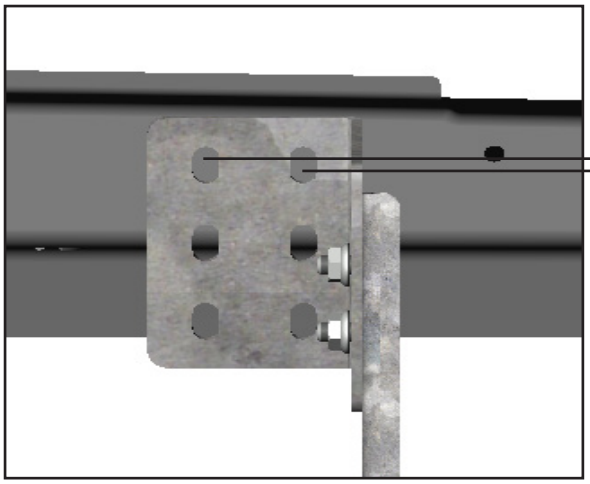

Mark 2 holes of the brackets head on the vehicle horizontal rim.

TOOLS

❑ Marker

MARK

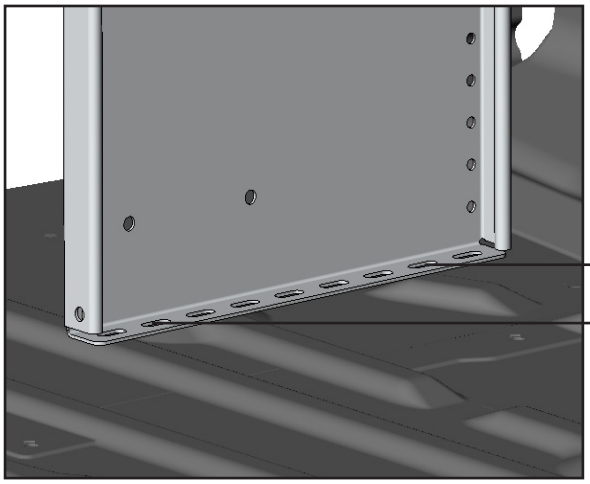

Mark 2 holes of each end panel on the vehicle floor.

NOTE: If you are using Ranger floor, please go to **PAGE 12.**

TOOLS

❑ Marker

MARK

PHASE 2 – INSTALLATION

2.3 ATTACH PLUS NUTS

2.3.1 • Lift the assembled shelf on the side.
• Drill all the marks using 1/2" drill bit w/ drill collar, then attach plus nuts to the holes.

NOTE: Use 1/2" drill bit with drill collar to stop drill at 1/2" depth.

WARNING: Before drilling, ensure that you will not hit any critical parts of the vehicle like the **Gas tank**, **Wiring Harness** and **Hose**.

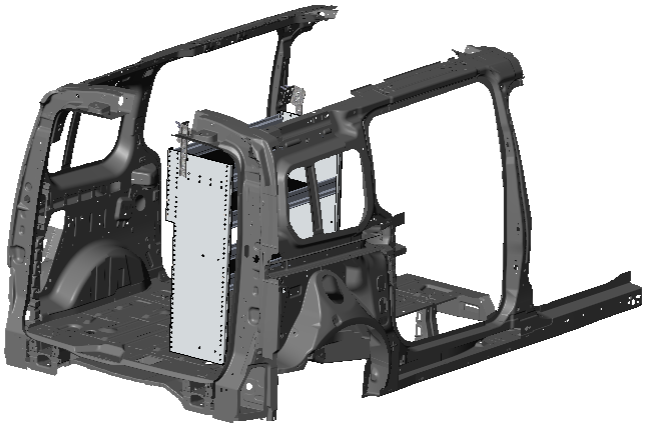

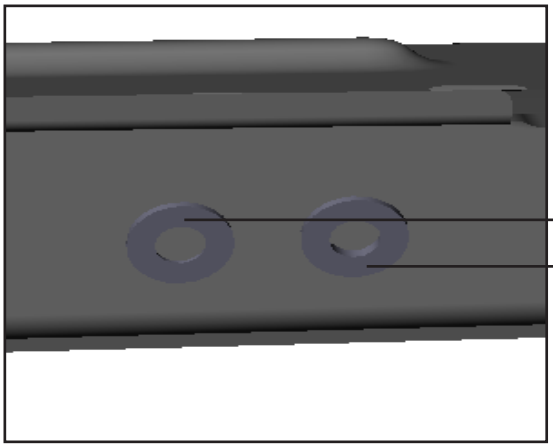

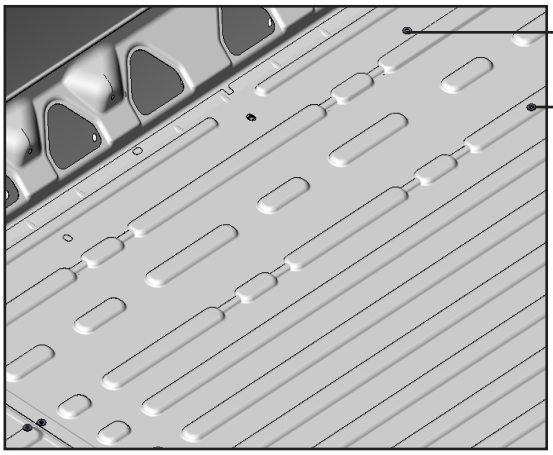

PLUSNUT

Drill all the marks then, attach plus nuts to the holes.

TOOLS

- ❑ Cordless Drill
- ❑ 1/2" Drill Bit w/ Drill Collar (Set at 1/2")
- ❑ Plus Nut Tool (5/16")

HARDWARE USED

8×

#94-132 Plus Nut

DRILL COLLAR
(SET AT 1/2")

2.3.2 How to attach plus nut.

- **USING PLUSNUT GUN**

STEP: Put the plusnut on the plusnut gun, then attach the plus nut in the hole by turning the gun forward until the plus nut locks, then remove the gun by turning in reverse.

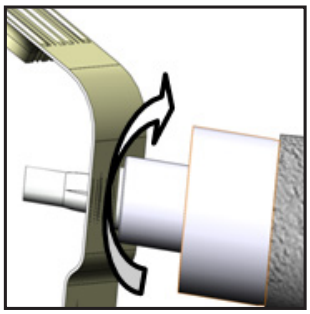

FORWARD

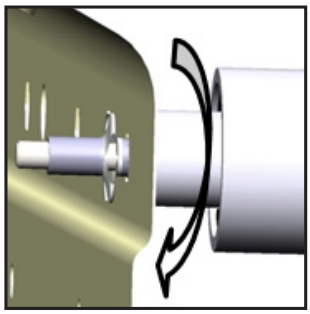

REVERSE

- **USING THE 6491 PLUSNUT TOOL**

NOTE: The hardware used for the 6490 plusnut tool is not included in the fastener bag. The 6490 plusnut tool can be ordered separately upon demand at no charge.

6491

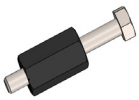

HARDWARE USED

Flat washer 5/16"

Flat washer 5/16" BS × 7/8" OD

TOOLS

- ❑ Cordless Impact
- ❑ 1/2" Socket
- ❑ 9/16" Wrench

STEP 1:
Assemble the 6491 plusnut tool with the hardware needed, plus nut and the 9/16" wrench as shown.

STEP 2:
Attach the plus nut in the hole by turning the bolt forward using an impact with a 1/2" socket until the plusnut locks, then remove the bolt by turning the impact in reverse.

FORWARD

REVERSE

PHASE 2 – INSTALLATION

2.4 ATTACH SHELF UNIT TO THE FLOOR

WITHOUT RANGER FLOOR

2.4.1 Put the assembled shelf back in place aligning the holes to the plusnuts, then install the end panels to the plus nuts.

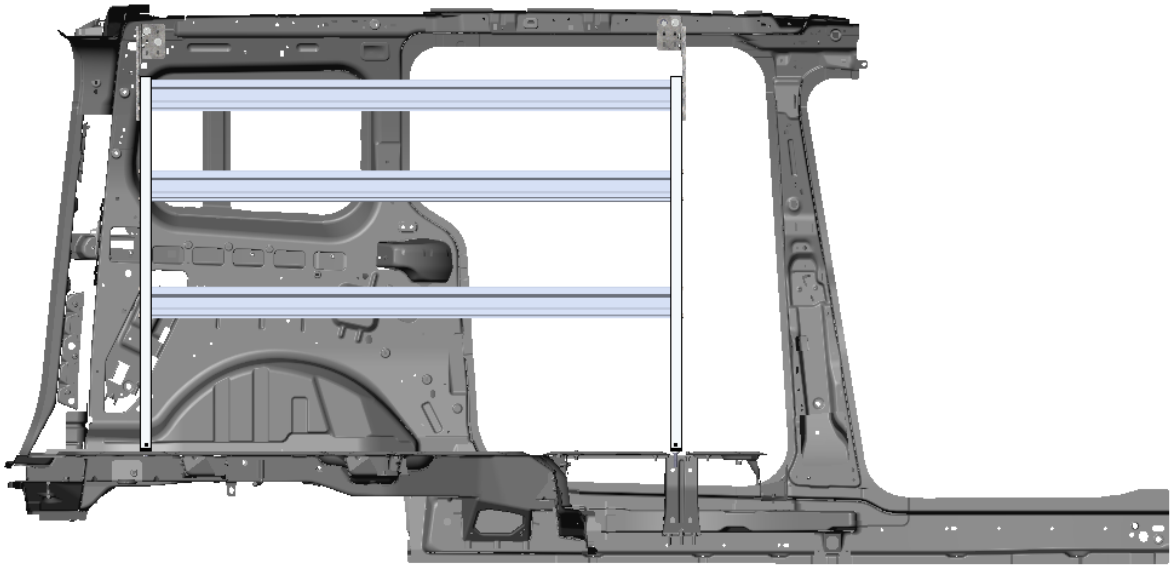

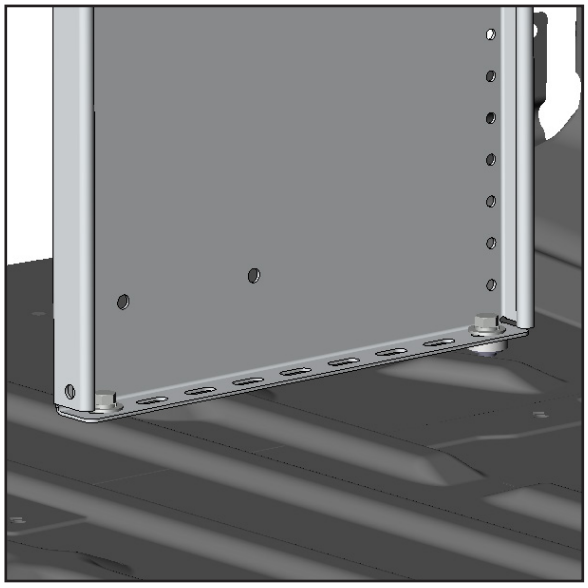

TOOLS

- ❑ Cordless Impact
- ❑ 1/2" Socket

HARDWARE USED

4×

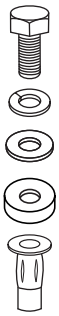

#90-011 Hex Bolt 5/16" × 1-3/4"

#98-122 Lock Washer

#98-116 Flat Washer

#98-157 Spacers
(QTY = Gap between floor and end panel)

#94-132 5/16" Plusnut

MOST VEHICLE USE 1 SPACER WHEN NOT OVER RIBS

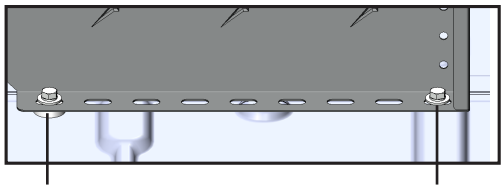

WITH RANGER FLOOR

2.4.2 • Lift the shelving unit inside the van, then put it in place.
• Install the shelving unit to the floor mounting track by sliding bolts in the mounting tracks, and putting screw on the other side of the end panels of the shelving unit.

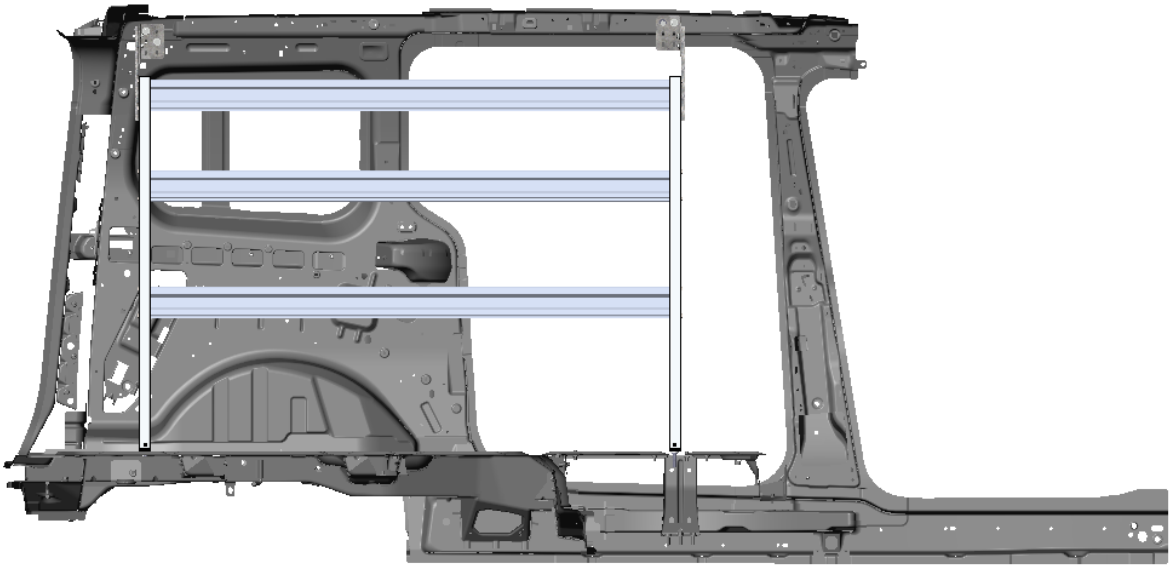

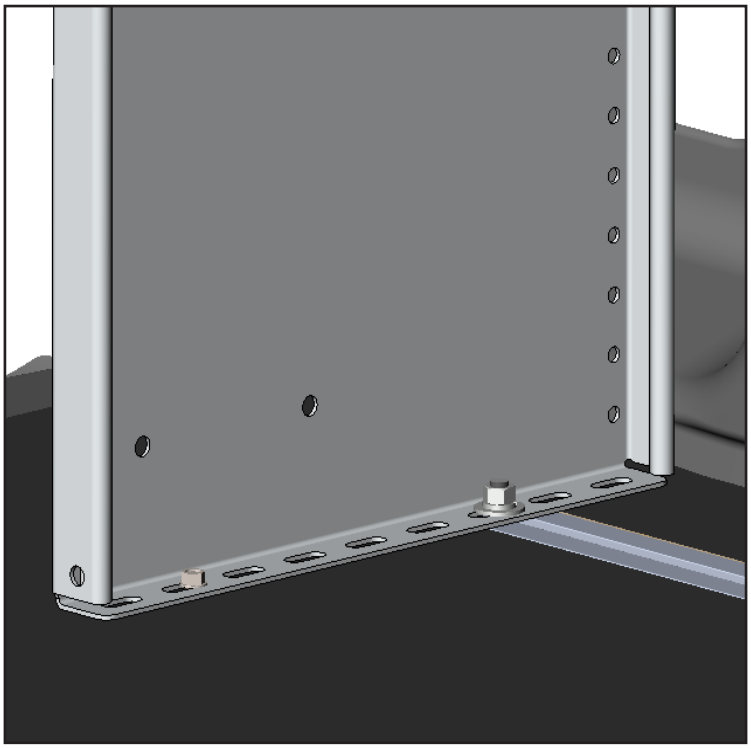

TOOLS

- ❑ Cordless Impact
- ❑ 3/8" Driver Bit
- ❑ 1/2" Socket

HARDWARE USED

2× FLOOR FASTENER KIT

#92-102 Screw 1"

HARDWARE USED

2× FLOOR FASTENER KIT

#90-490 Carriage Bolt 5/16" × 1"

#98-116 Lock Washer

#98-122 Flat Washer

#94-104 Hex Nut

PHASE 2 – INSTALLATION

2.5 ATTACH WALL BRACKETS

2.5.1 Aligned the wall brackets to the plus nuts, then install the wall brackets to the wall.

NOTE: Tightened the bolts that used to attached the wall bracket to the wall or wall kits 1st before the bolts that used to attached the wall bracket to the end panel.

IMPORTANT: After installation is completed, ensure all bolts are tightened.

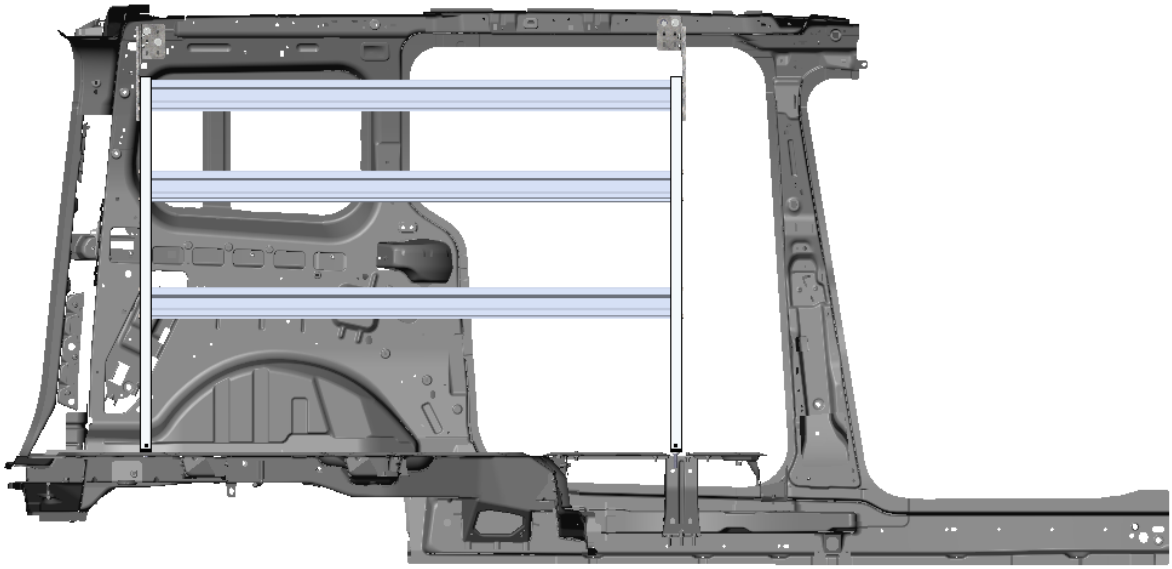

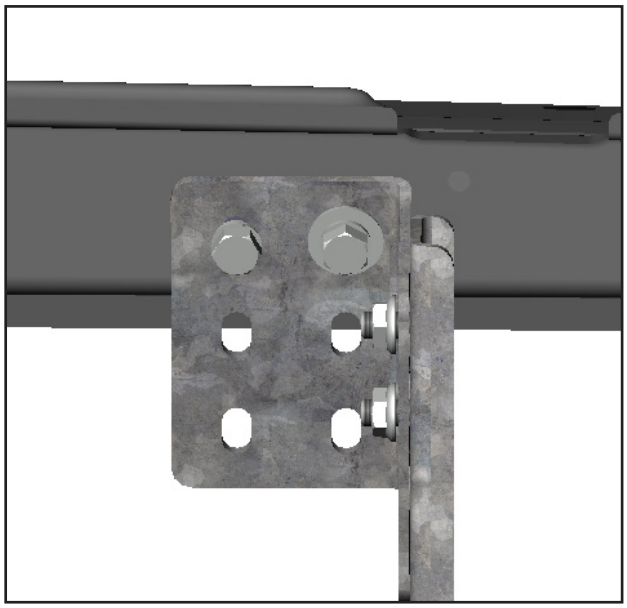

TOOLS

- ❑ Cordless Impact
- ❑ 1/2" Socket

HARDWARE USED

4×

#90-212 Hex Bolt 5/16" × 1-1/4"

#98-122 Lock Washer

#98-116 Flat Washer

#94-132 5/16" Plusnut

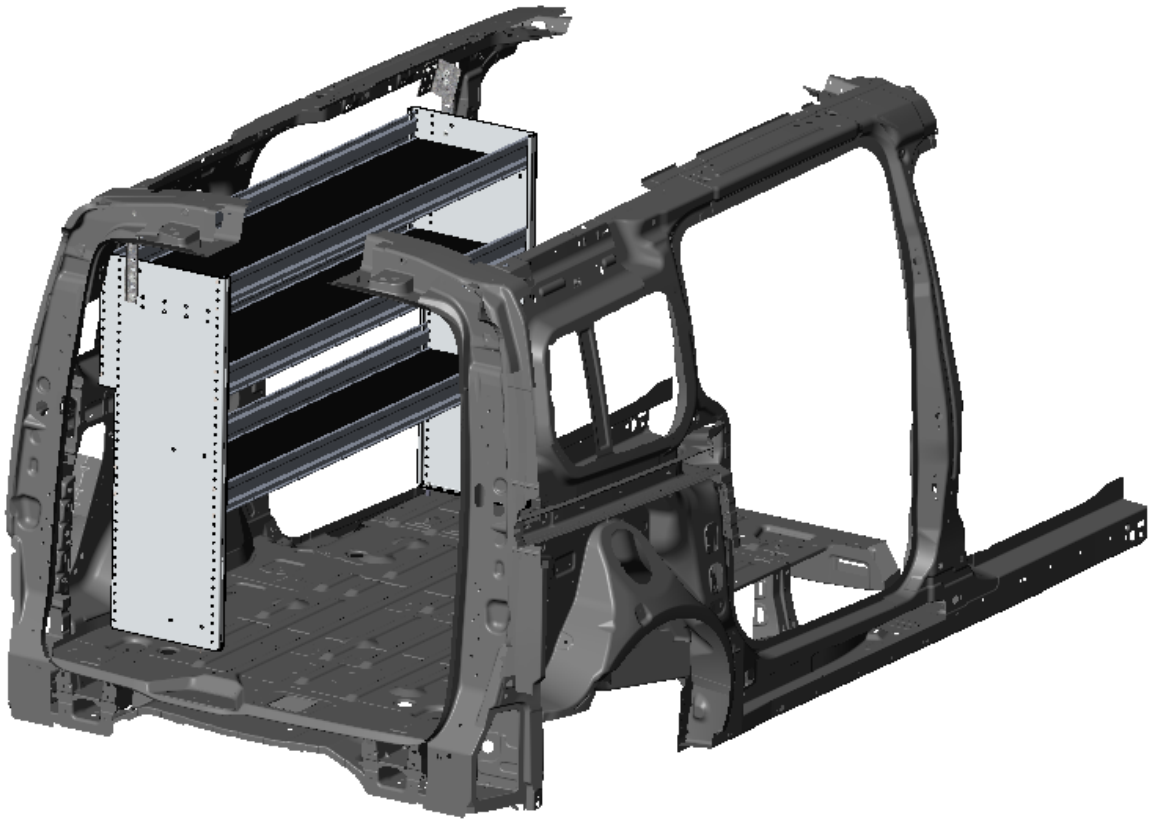

“You have successfully installed your T4-RA60-3

Thank you for doing business with us.”

For any feedback or suggestions you may have, please contact: cs@rangerdesign.com